United States Patent Office

Des. 233,045
Patented Oct. 1, 1974

233,045

CONTROL FOR A TELEVISION ELECTRONIC GAME

Gary L. McMahon, Fort Wayne, Ind., and John Brooks Van Dyke, Los Angeles, Calif., assignors to The Magnavox Company, Fort Wayne, Ind.

Filed Jan. 2, 1973, Ser. No. 320,244

Term of patent 14 years

Int. Cl. D13—*03*
U.S. Cl. D26—13 C

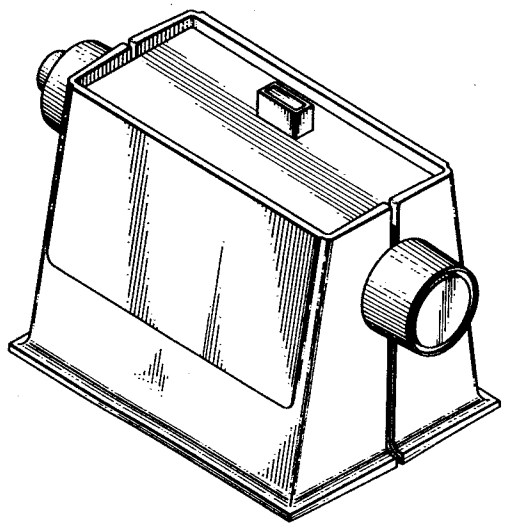

FIG. 1

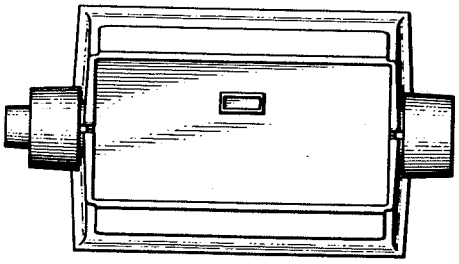

FIG. 2

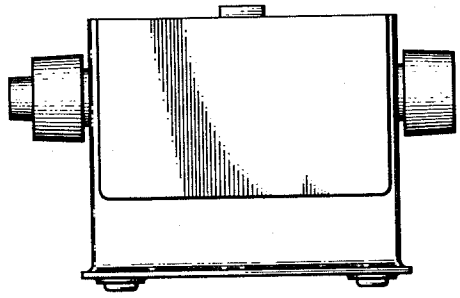

FIG. 3

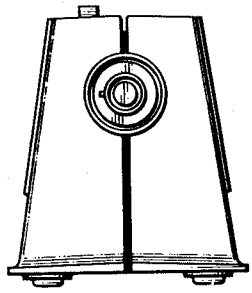

FIG. 4

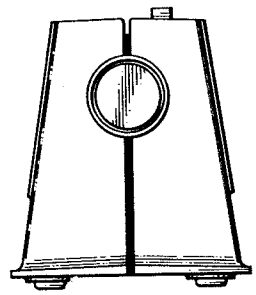

FIG. 5

FIG. 1 is a view in perspective of the control for a television electronic game;

FIG. 2 is a top elevational view of the control of FIG. 1;

FIG. 3 is a front elevational view of the control of FIG. 1;

FIG. 4 is an elevational view of one side of the control of FIG. 1; and

FIG. 5 is an elevational view of the other side of the control of FIG. 1.

We claim:

The ornamental design for a control for a television electronic game, substantially as shown and described.

References Cited

UNITED STATES PATENTS

D. 174,057	2/1955	Ritter	D26—5 R
D. 102,751	1/1937	Lee	D74—5 R

OTHER REFERENCES

Mart, April 1958, p. 26, illustration No. 3, remote control.

MELVIN B. FEIFER, Primary Examiner